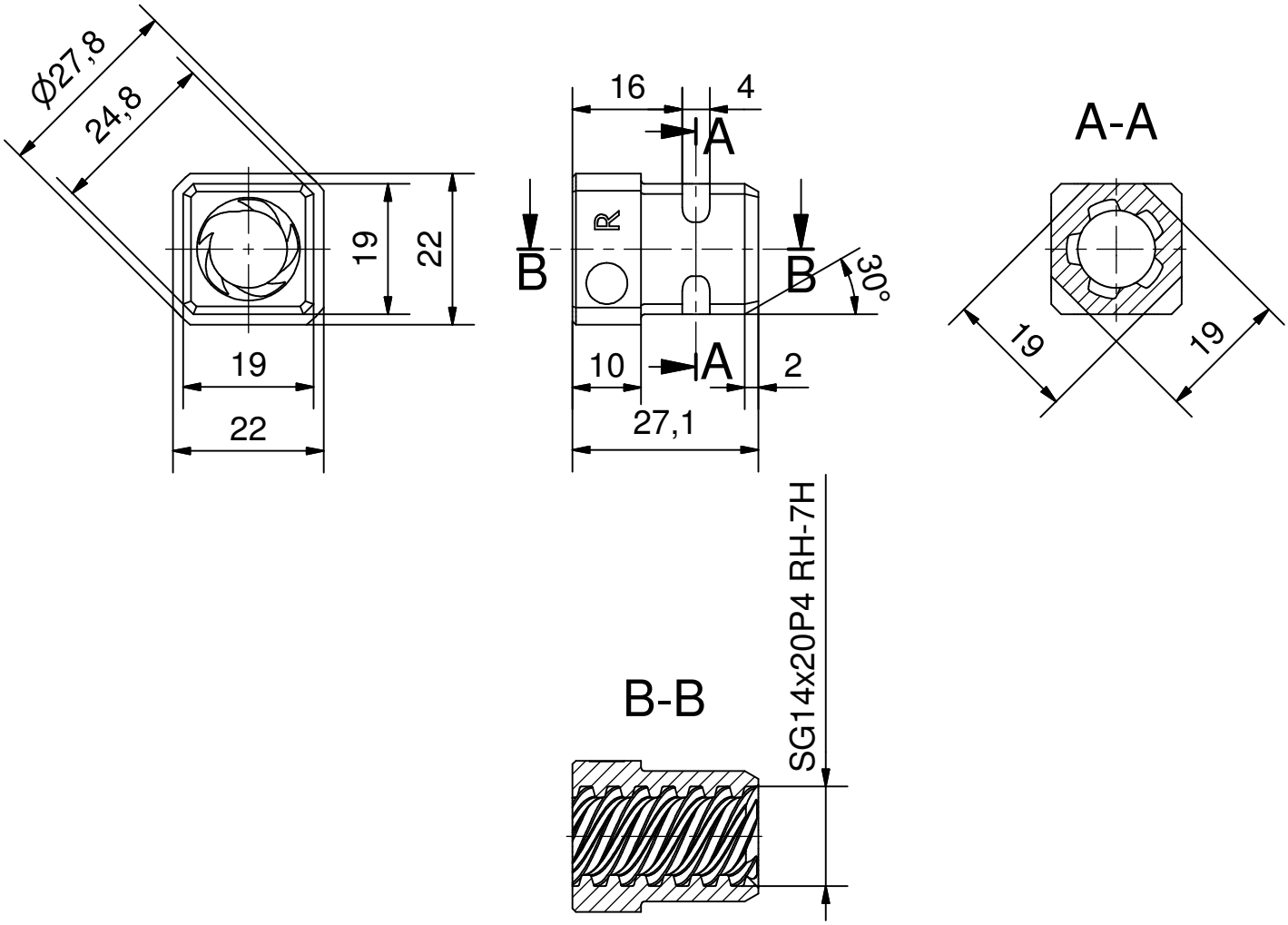

tec24.info

Mutter SG14x20P4 RH-7H
3038.20-46